SAOL2 Low Intensity LED Aviation Obstruction Light

IP66 -30~+50°C

Applied on tall structures for collision avoidance measures and airport runway safety

Obtained Certification from the International Civil Aviation Organization

SAOL2

SAOL2P

Wire is not exposed outside in the pole mount model.

SAOL2 Low Intensity LED Aviation Obstruction Light

- Low intensity A type aviation obstruction lights are installed onto fixed objects that are less than 150m from the land or water surface

ICAO standard	Low intensity A type		
Light source	High intensity light emitting diodes		
Light color	Red		
Light function	Steady		
Rated voltage	DC12V, DC24V, AC110V, AC220V		
Power consumption	20W		
Standard housing color	Red	Cable entry	1/2″PF
Materials	Lens-PC, Housing-Al		
Protection rating	IP66	Ambient operating temperature	-30°C to +50°C
Certificates	ICAO compliant	Luminous intensity	19cd ±25%

Technical Diagram

(Units : mm)

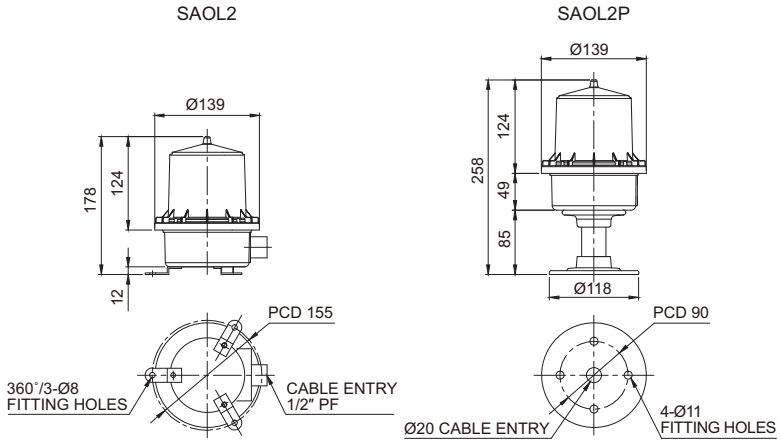

Customization

- Cable gland - 1/2″PF
  Standard model is not equipped with cable gland
- Built-in darkness detecting sensor available

Ordering Specification

SAOL2	-	24	-	R
[Model number]		[Voltage]		[Color]
• SAOL2 • SAOL2P		• 12-DC12V • 24-DC24V • 110-AC110V • 220-AC220V		• R-Red